NTB-C145W-A
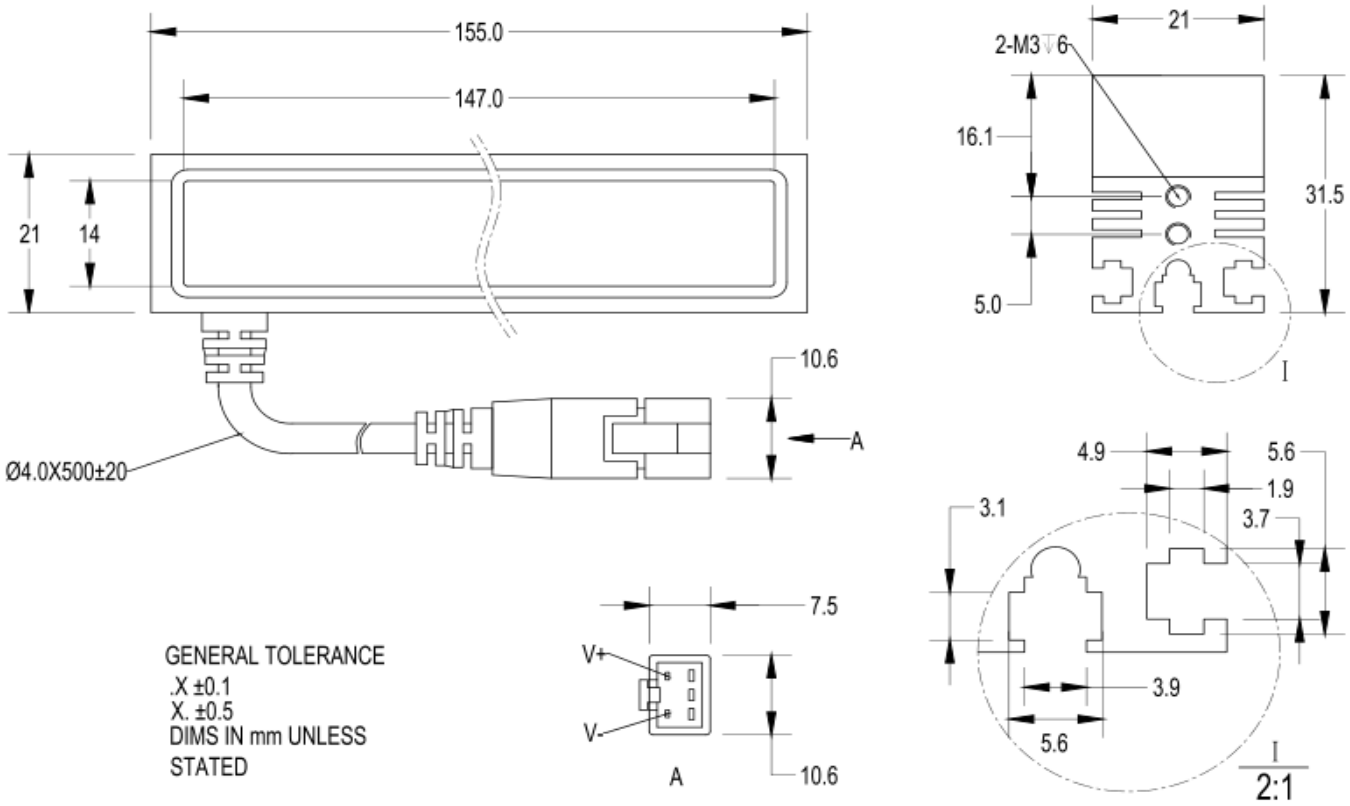
Model	NTB-C145W-A
Current(<A)	0.42
Power(<W)	8.4
Color	White
Workingarea(mm*mm)	147*14
Dimension(mm*mm*mm)	155*21*31.5
Working Temperature	0~40℃
Storage Temperature	-20~60℃