VCM230B-100P-AL

C-mount Bi-telecentric Lens

- Superior bi-telecentric design, distinguished imaging quality;
- Largest FOV from 26mm upto 300mm;
- Optimized for 1/2.5"~1.1" C-Mount cameras;
- Low distortion, good telecentricity, big aperture and big depth of field for high end application.

Optical Specifications	
Magnification (x)	0.115
Object Field of View (Φmm)	100
Working Distance (mm)	238±3
Max Sensor Size (Φmm)	11.4 (2/3")
Best Aperture (F/#)	4.87
Telecentricity typical (max) (deg)	<0.1
Distortion typical (max) (%)	<0.1
MTF30 (lp/mm)	>138
Depth of Field (mm)	±8
Length of I/O (mm)	515.1

Field of View (mm × mm)	
8.45x7.07 w ith IMX264	73.4x61.4
Mechanical Specifications	
Mount	C
Length (mm)	259.6
Compatible Lighting	
Telecentric LED Lighting	VCL-100P-xW-y
	Beam Diameter 100mm

Notes:

1.Depth of Field is calculated value, this value could be used for imaging test, but to get sharp image in application, half of calculated value is suggested.
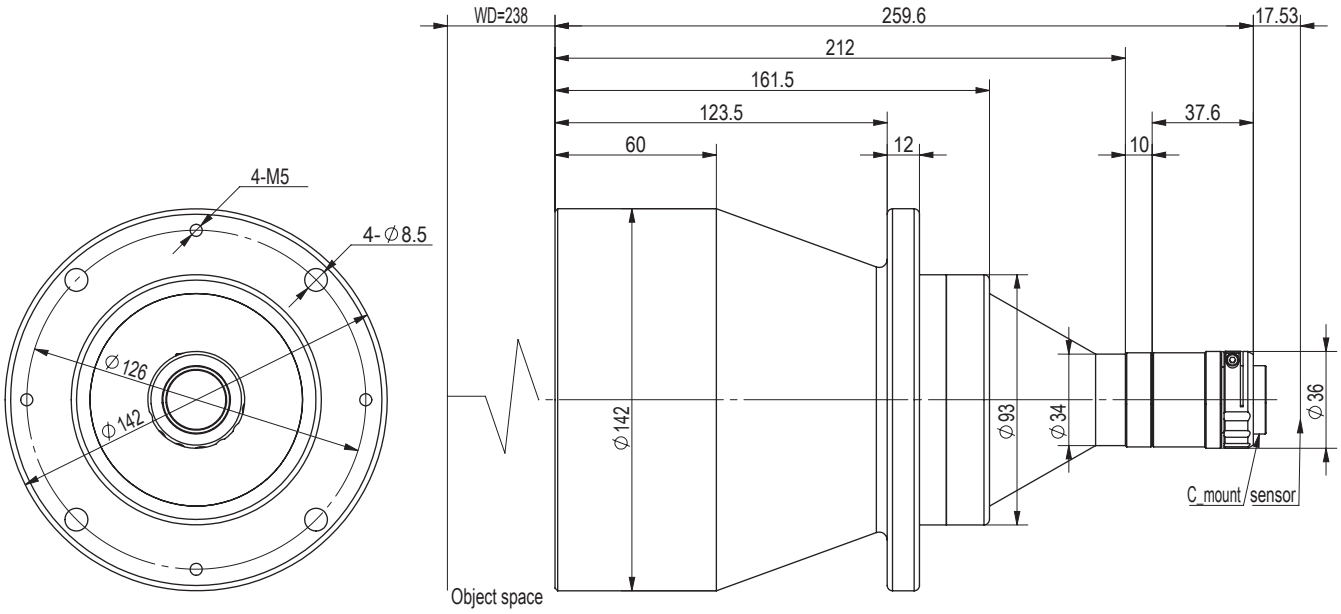
2.Length of I/O = WD + Length + Back Focal Length.