VFA1-230-10M08

8mm Focal Length
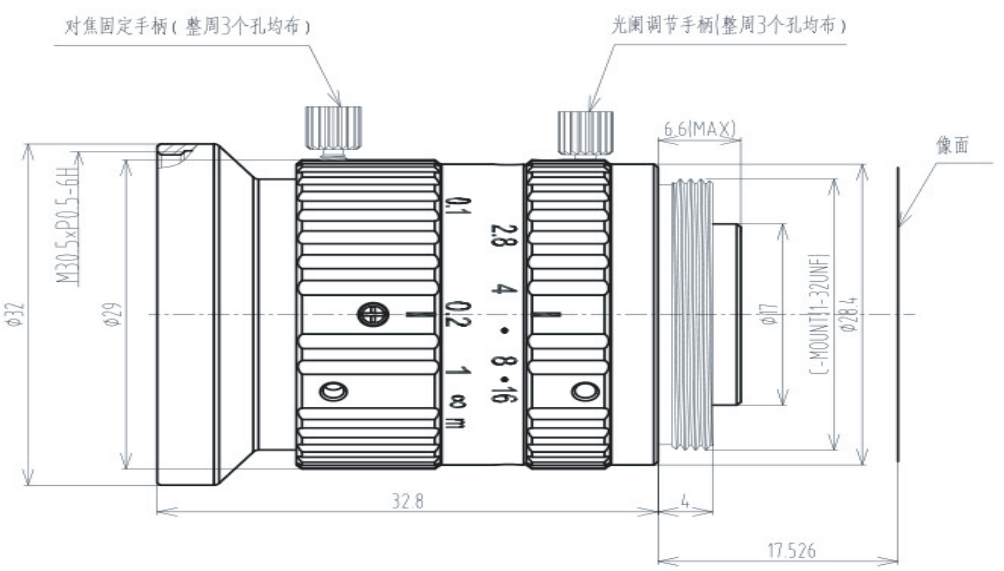
2/3" F2.8/8 C Mount					Working distance	Optical Magnification	2/3" Field of View(mm)	
Focal Length		f=8mm			mm		H	V
Max Diameter (Ratio)		F=1:2.8~16			5000	0.002X	5371.8	4028.8
Picture Size		2/3"(8.8×6.6mm)	1/2"(6.4×4.8mm)	1/3"(4.8×3.6mm)	2000	0.004X	2156.4	1617.3
Angle	H	57.6°	42.8°	32.7°	1000	0.008X	1084.6	813.5
	V	44°	32.7°	24.7°	900	0.009X	977.4	733.1
	D	67.6°	52.2°	40.3°	800	0.010X	870.3	652.7
Object Dimension at 200mm	H	227.2mm	166mm	124.5mm	700	0.012X	763.1	572.3
	V	170.4mm	124.5mm	93.2mm	600	0.014X	655.9	491.9
	D	284.6mm	207.6mm	155.2mm	550	0.015X	602.3	451.7
Distortion (TV)		<1%	<0.5%	<0.3%	500	0.016X	548.7	411.5
Focus distance(min)		0.1m			450	0.018X	495.1	371.3
Flange back		17.526mm in air			400	0.020X	441.5	331.2
Back focus		11.5mm(min)			350	0.023X	387.9	291
Filter screw size		M30.5×P0.5			300	0.027X	334.4	250.8
Front/Rear Effective Dia		Front Φ17.15mm Rear Φ8.5mm			250	0.032X	280.8	210.6
Mount		C-Mount			200	0.039X	227.2	170.4
Temperature Range		-10~+50°C			150	0.051X	173.6	130.2
Storage Temperature Range		-20~+60°C			100	0.074X	120	90