VFA4-230-5M12V2

12mm Focal Length
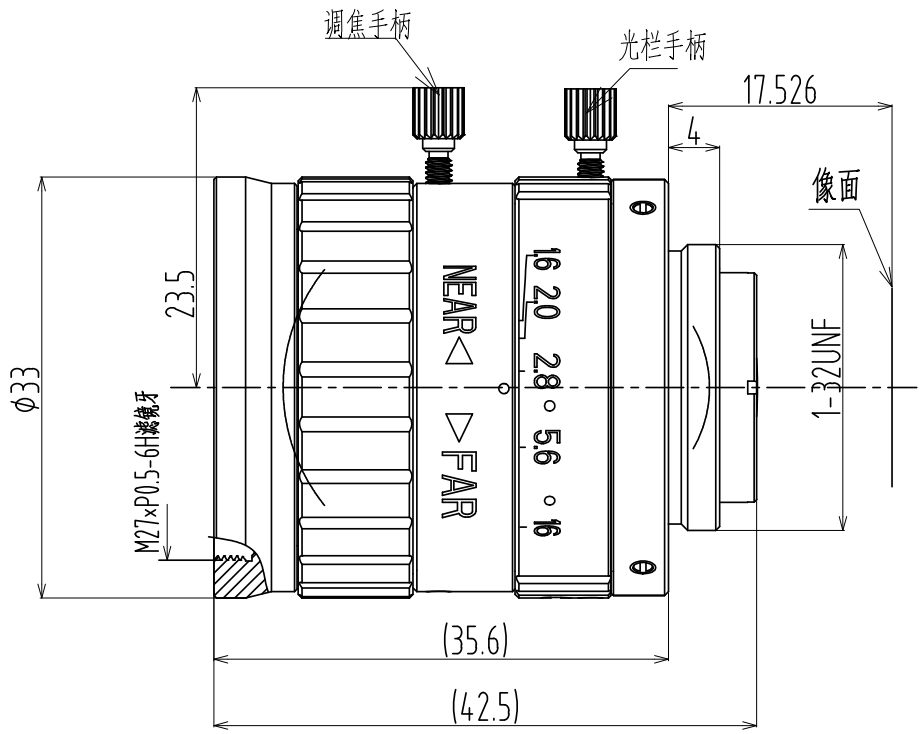
2/3 " F1.6 12mm				Working distance mm	Optical Magnification	2/3"Field of View(mm)	
Focal Length		f=12mm				H	V
Max Diameter(Ratio)		F=1:1.6~16		1000	0.012X	735.440	551.580
Picture Size		2/3"(8.8x6.6mm)	1/2"(6.4x4.8mm)	900	0.0133X	662.438	496.828
Angle	H	39.6°	29.3°	800	0.015X	589.435	442.076
	V	30.2°	22.2°	750	0.0171X	552.934	414.700
	D	48.4°	36.2°	700	0.0160X	516.432	387.324
Object Dimension at WD=200	H	151.5mm	110.2mm	650	0.0184X	479.931	359.948
	V	113.6mm	82.6mm	600	0.0199X	443.429	332.572
	D	189.2mm	137.7mm	550	0.0217X	406.927	305.195
Distortion(TV)		<0.1%	<0.1%	500	0.0238X	370.426	277.819
Focus distance(min)		0.1m~∞m		450	0.0264X	333.923	250.443
Flange back		17.526mm in air		400	0.0297X	297.421	223.066
Back focus		10.5mm in air		350	0.0338X	260.918	195.689
Flilter screw size		M27xP0.5-6g		300	0.0393X	224.415	168.311
Front/Rear Effective Dia		前Φ15.8mm/后Φ10.4mm		250	0.047X	187.911	140.933
Mount		C-Mount		200	0.0584X	151.406	113.554
Temperature Range		-10~+50℃		150	0.0771X	114.897	86.173
Storage Temperature Range		-20~+60℃		100	0.1135X	78.382	58.786